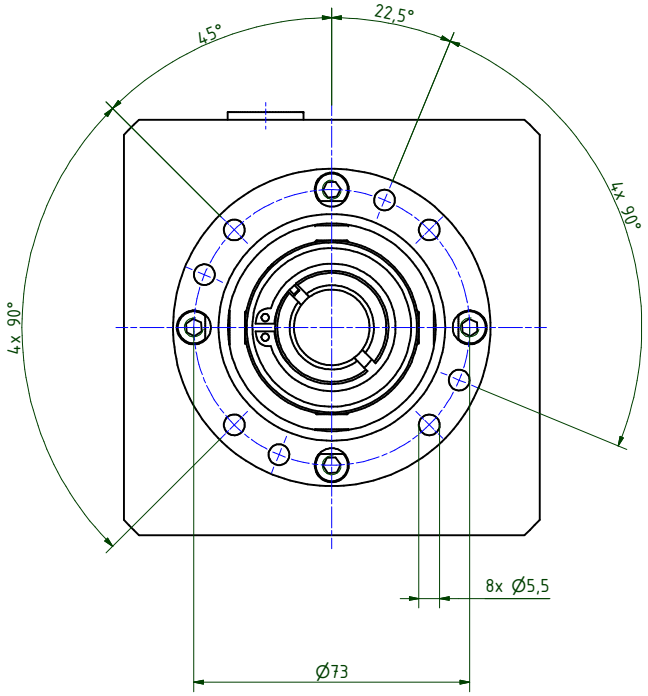


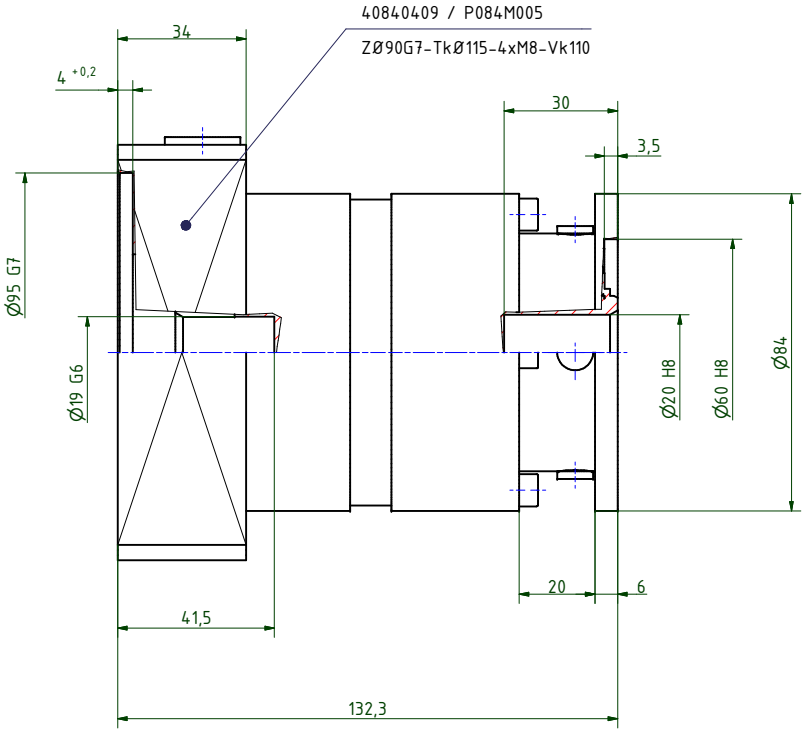


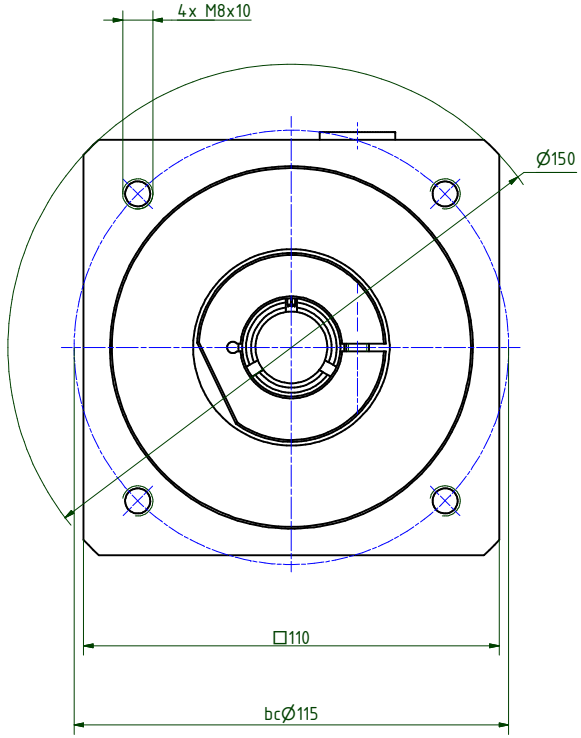


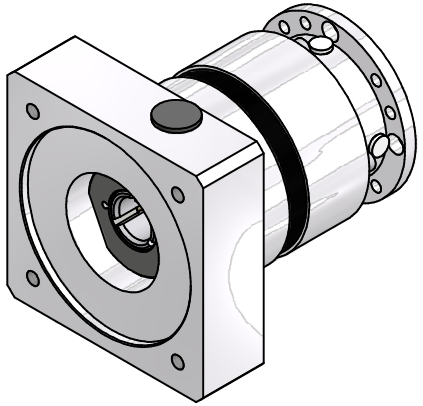

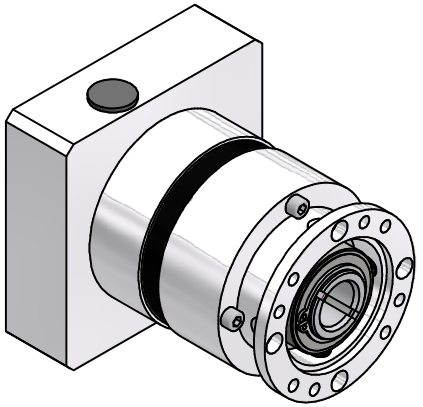

| i = | 3 | 4 | 5 | 7 | 10 |
|---|---|---|---|---|---|
| nominal output torque (Nm) | 40 | 54 | 54 | 54 | 40 |
| max. acceleration torque (Nm) | 70 | 75 | 75 | 75 | 75 |

output shaft bearing: deep groove ball bearings 2RS
straight-toothed planetary gearbox
backlash at output shaft: ≤ 10 arcmin
lifetime: > 30.000h
efficiency: by rated load 94% (depends on ratio)
lubrication: lifetime-lubrication
nominal output torque at n1 = 3.000 1/min
operating temperature: -20°C bis +90°C
motor mounting: M2 (stocked driving pinion)
- torque of clamping screw: 9Nm

operation mode: S1
operation ratio: cB1
protection system: IP54

consider mounting instruction
subject to modifications

| | | | | | |
|---|---|---|---|---|---|
| Verwendungsbereich | Allgemein-toleranzen ISO 2768-mK | Kanten ISO 13715 | Maßstab 1 : 1 | (Gewicht) | |
| | | | Werkstoff, Halbzeug Rohteil-Nr. Modell-oder Gesenk-Nr. | Generisch | |
| | Datum | Name | EPL-H84/1 | | |
| | Erst. 25.04.2022 | Kanz | | | |
| | Bearb. 26.04.2022 | Kanz | | | |
| | Freig. | | | | |
| | Kd-Fr. | | | | |
| Zust. Änderungen Datum Name | Ursprung | | 40080323-1-E19-K-M409 | Blatt 2 / 2 | A2 |