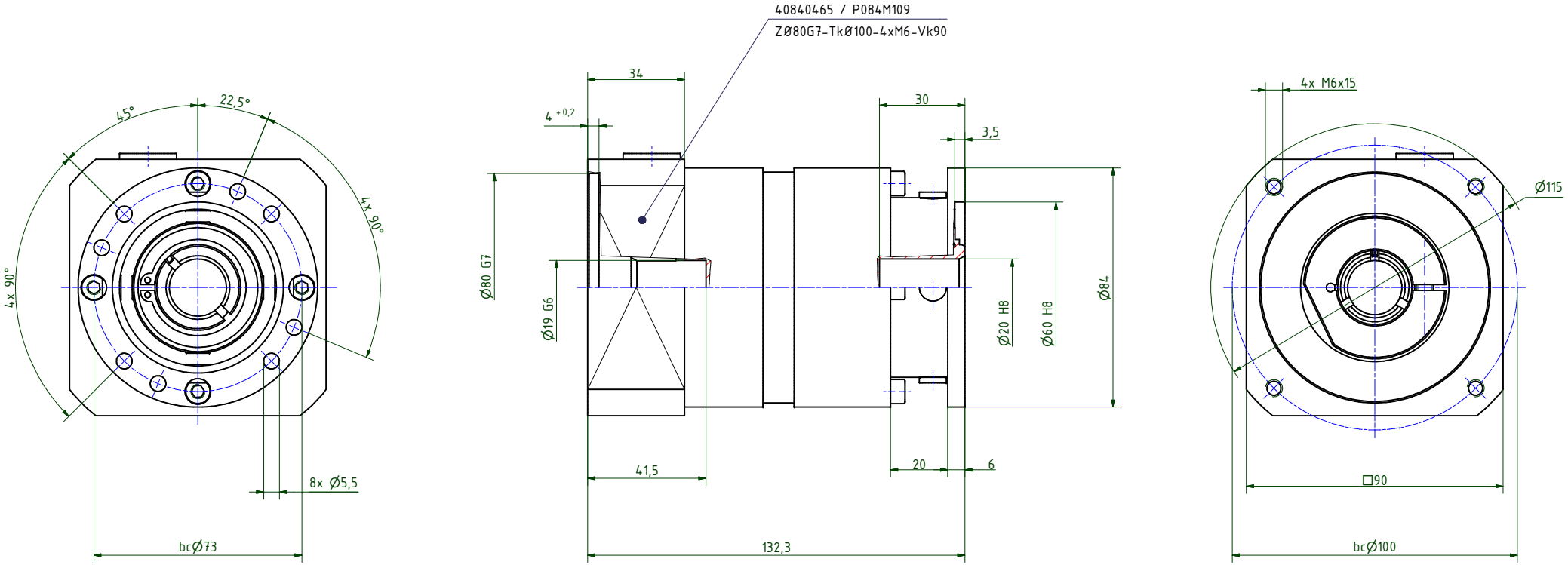

i =	3	4	5	7	10
nominal output torque (Nm)	40	54	54	54	40
max. acceleration torque (Nm)	70	75	75	75	75

output shaft bearing: deep groove ball bearings 2RS
straight-toothed planetary gearbox
backlash at output shaft: ≤ 10 arcmin
lifetime: > 30.000h
efficiency: by rated load 94% (depends on ratio)
lubrication: lifetime-lubrication
nominal output torque at n1 = 3.000 1/min
operating temperature: -20°C bis +90°C
motor mounting: M2 (stocked driving pinion)
- torque of clamping screw: 9Nm

operation mode: S1
operation ratio: cB1
protection system: IP54

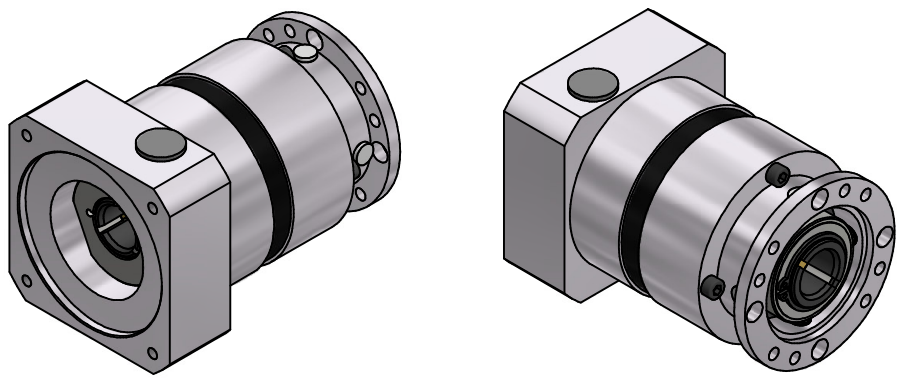

consider mounting instruction
subject to modifications

Verwendungsbereich	Allgemein-toleranzen ISO 2768-mK	Kanten ISO 13715	Maßstab 1 : 1	(Gewicht)	
			Werkstoff, Halbzeug Rohteil-Nr. Modell-oder Gesenk-Nr.	Generisch	
	Datum	Name	EPL-H84/1		
Erst.	26.04.2022	Kanz			
Bearb.	26.04.2022	Kanz			
Freig.					
Kd-Fr.					
Zust. Änderungen Datum Name	Ursprung		40080323-1-E19-K-M465	Blatt 2 / 2	A2