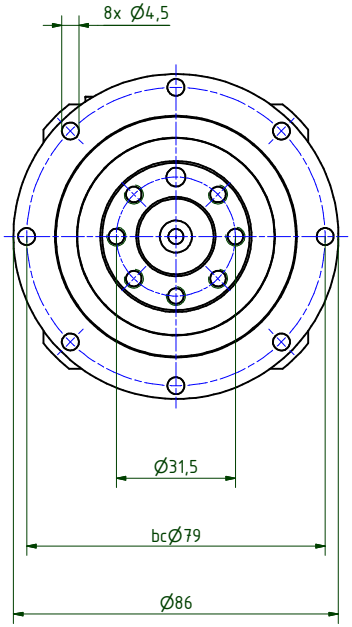

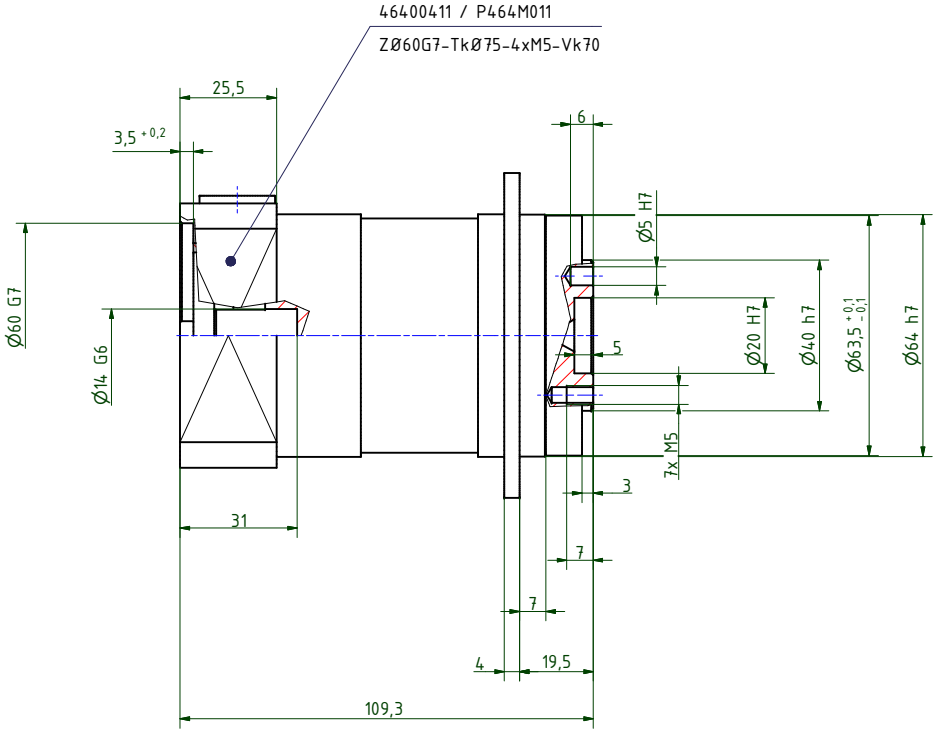

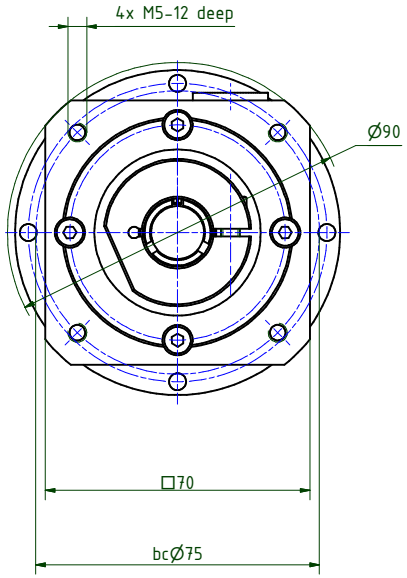

i =	12	16	20	25	35	40	50	70	100
nominal output torque (Nm)	43	52	52	47	47	52	47	42	18
max. acceleration torque (Nm)	57	71	71	62	62	71	62	52	28
emergency torque (Nm)	72	84	84	84	84	84	84	84	62

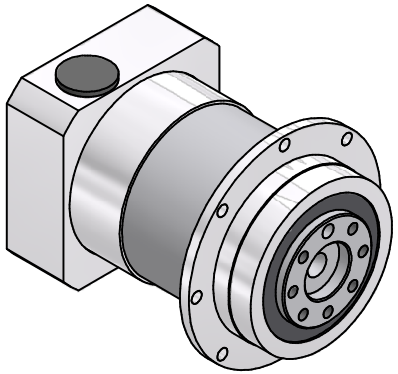

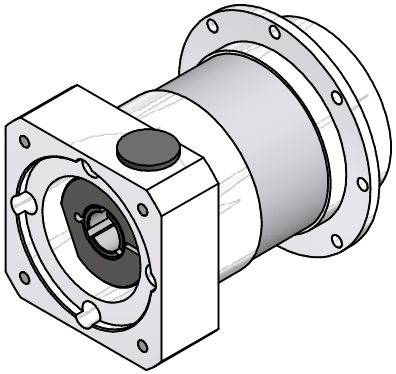

output shaft bearing: grooved ball bearing 2RS
- max. radial load: 600N bei n2=100 1/min Lh > 10.000h
- max. axial load: 1.200N bei n2=100 1/min Lh > 10.000h
- reference to shaft center at temp. = 30°C

straight-toothed planetary gearbox
backlash at output shaft: ≤ 12 arcmin
lifetime: > 30.000h
efficiency: by rated load 92% (depends on ratio)
lubrication: lifetime-lubrication
nominal output torque at n1 = 3.000 1/min
operating temperature: -20°C bis +90°C
motor mounting: M2 (stocked driving pinion)
- torque of clamping screw: 6Nm

operation mode: S1
operation ratio: cB1
protection system: IP65

consider mounting instruction
subject to modifications

Verwendungsbereich	Allgemein-toleranzen ISO 2768-mK	Kanten ISO 13715	Maßstab 1 : 1 (Gewicht)
			Werkstoff, Halbzeug Rohteil-Nr. Modell-oder Gesenk-Nr.
	Datum / Name		EPLFE64/2
	Erst. 10.11.2020 Kanz		
	Bearb. 16.11.2020 Kanz		
	Freig.		
	Kd-Fr.		
Zust. Änderungen Datum Name	Ursprung	Elsele Antriebstechnik	46400301-2-E14-K-M411
			Blatt 2 / 2
			A2